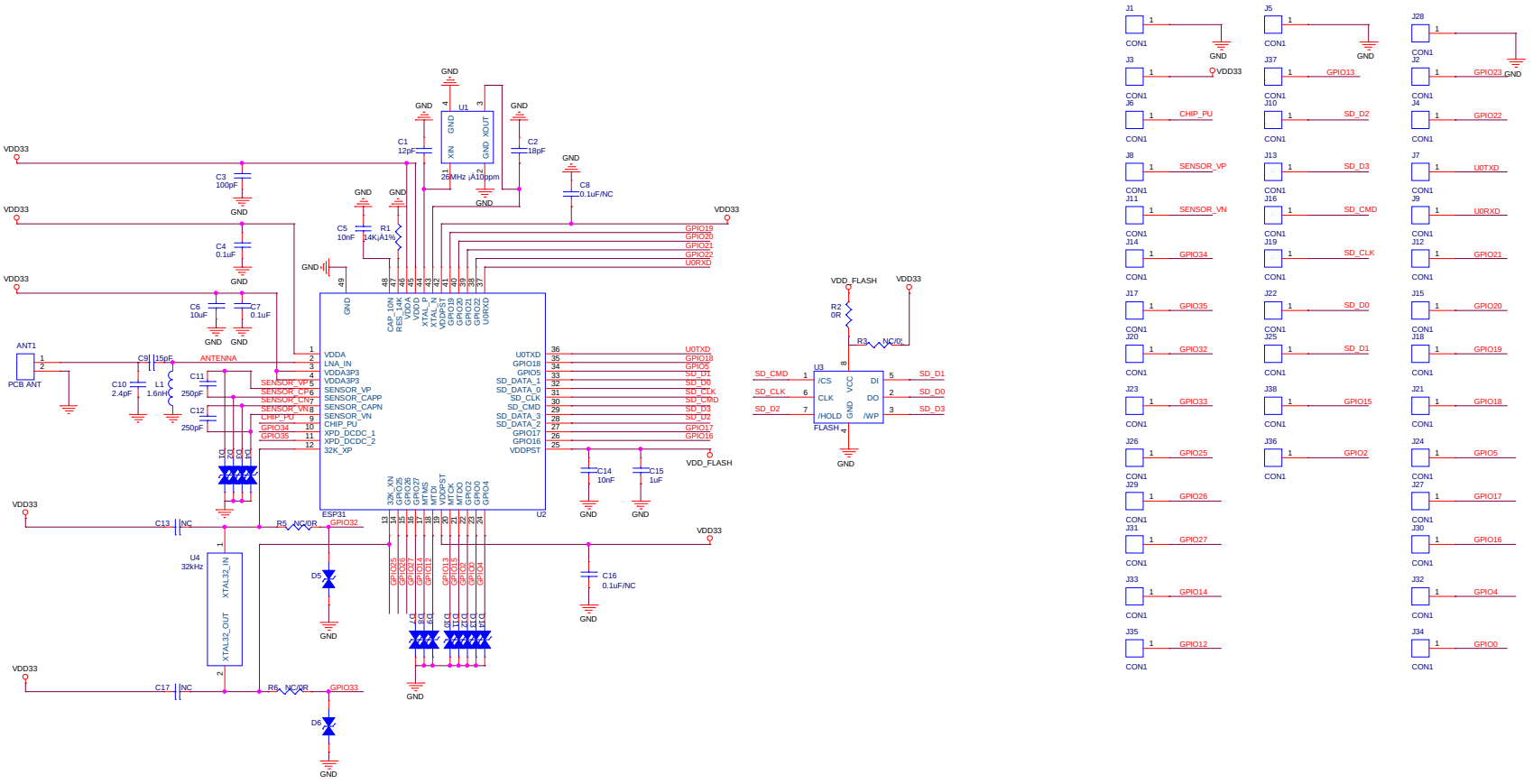

Espressif Systems

Title	<ESP31A_Module_V1>		
Size A2	Document Number <Doc>		Rev
Date: Monday, November 23, 2015	Sheet 1 of 1		